Dylan Thornburg

Santa Clara University	ELEN 164 Winter 2026	Dr. Shoba Krishnan
Laboratory #4: Rectifiers		

I. Objectives

- To study rectifiers and analyze their performance with different types of loads.
- To calculate the average voltage obtained from each rectifier circuit
- To understand power factor and harmonic distortion

II. Laboratory Procedure

Preparation for lab:

Defining a transformer:

You will be making a transformer by using two inductors that are coupled.
See Figure .

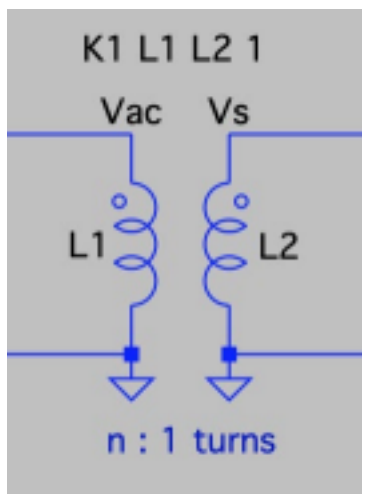

Figure 1. Transformer model

Place an inductor and label it L1. Place another inductor adjacent and label it L2. Add a spice directive

```
K L1 L2 1
```

This states that L1 and L2 are coupled with a 100% efficiency.

Question: If the coupling coefficient is 0.99 what do you think that implies?
Not all power will be transferred (nonideal transformer).

You pick values for L1 and L2 to get the turns ratio n:1. If you want a transfer with a **10:1** ratio, then you put a value for L1 **100** times that of L2.

Defining an ideal diode:

For the diode model use the below script and add that to any schematic where you will be using

an ideal diode.

```
.model MyidealDiode D(Ron=1m Roff=100Meg Vfwd=0)
```

Question: What does this ideal model state about the behavior of the diode?

It states the diode acts like a 1ohm resistor when on, a 100Mohm resistor when off, and there's no fwd voltage.

Part 1: Half Wave Rectifier

In this part you will be studying the performance of the half wave rectifier

Section 1: Resistive load

Draw the schematic shown in Figure 2.

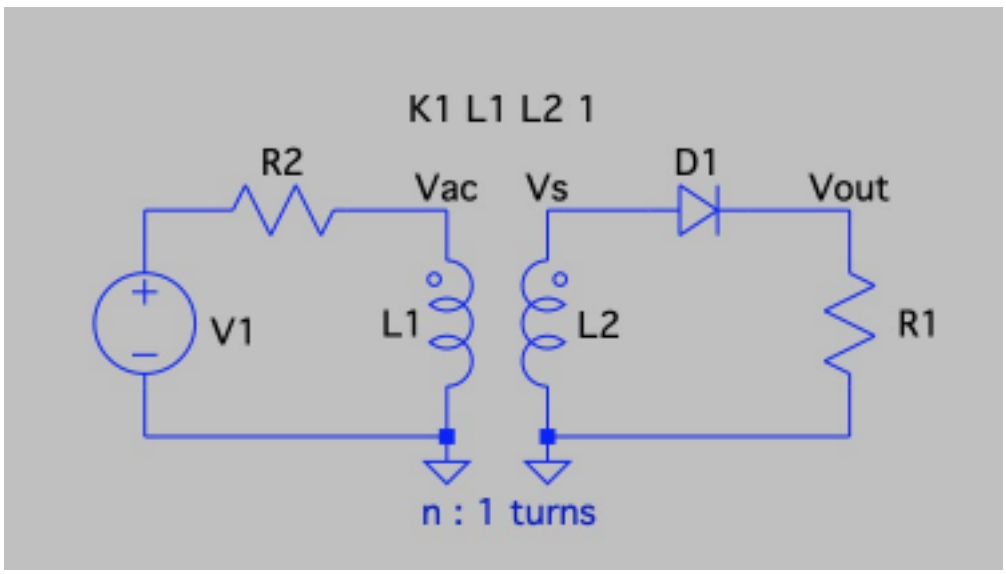

Figure 2. Half-Wave Rectifier with a Resistive Load

Simulations:

(1) Make the voltage source V1 a sinusoidal source with 170V amplitude and 60Hz frequency. You will need to add a small resistor R2 in series for the simulation to run. Set it to 1mΩ. (2) For the diode, select it and enter **`MyidealDiode`** for its model.
Include the directive for the ideal diode model as shown earlier.
(3) Pick the values of L1 and L2 of the transformer to be 144mH and 1mH respectively.
Pick the value of the load R1 = 50ohms.
Question: What do the L1, L2 values provide in turns ratio?

They provide a sqrt(144):sqrt(1) or 12:1 ratio.

(4) Label the input and output voltages as shown in Figure 2.
(5) Setup a Transient Analysis for 300ms, using 1us time step. But display the data after 150ms when the system has reached steady state. The statement that helps do this is **.tran 1us 300ms 150ms**
(6) You will be measuring several quantities as listed below
a. Using measure statements, find the average output voltage

.meas Vavg AVG V(Vout)

b. Now set up some measure statements so that we can calculate the power factor.

Get the rms values of source voltage and source current

.meas Vsrms RMS V(Vs)

.meas Isrms RMS I(L2)

Get the rms values of output voltage and output current

.meas Vorms RMS V(Vout)

.meas Iorms RMS I(R1)

c. Find the average power P and apparent power S using measure statements

d. Find power factor from P and S. Use a measure statement again.

(7) Run the simulation.

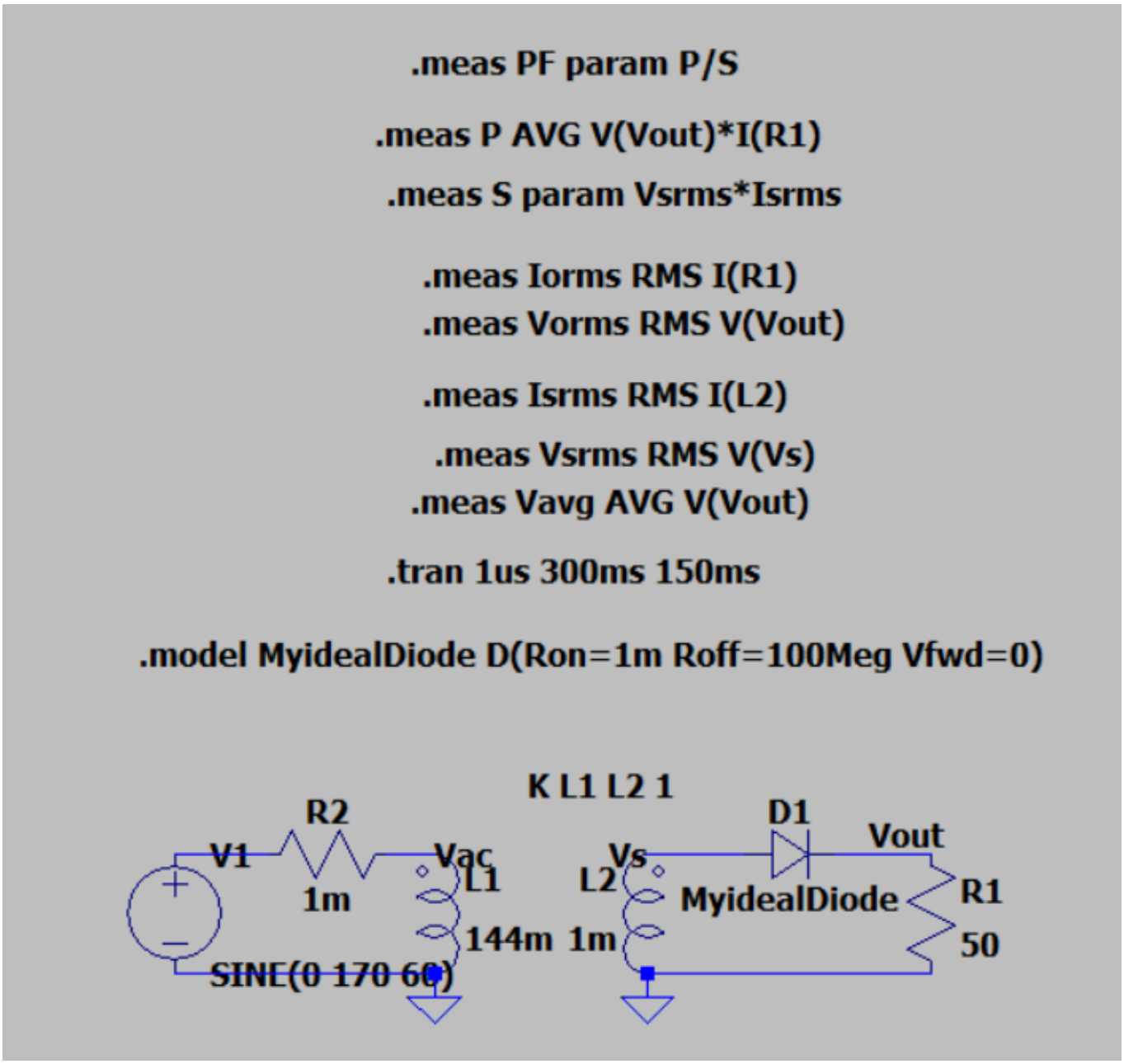

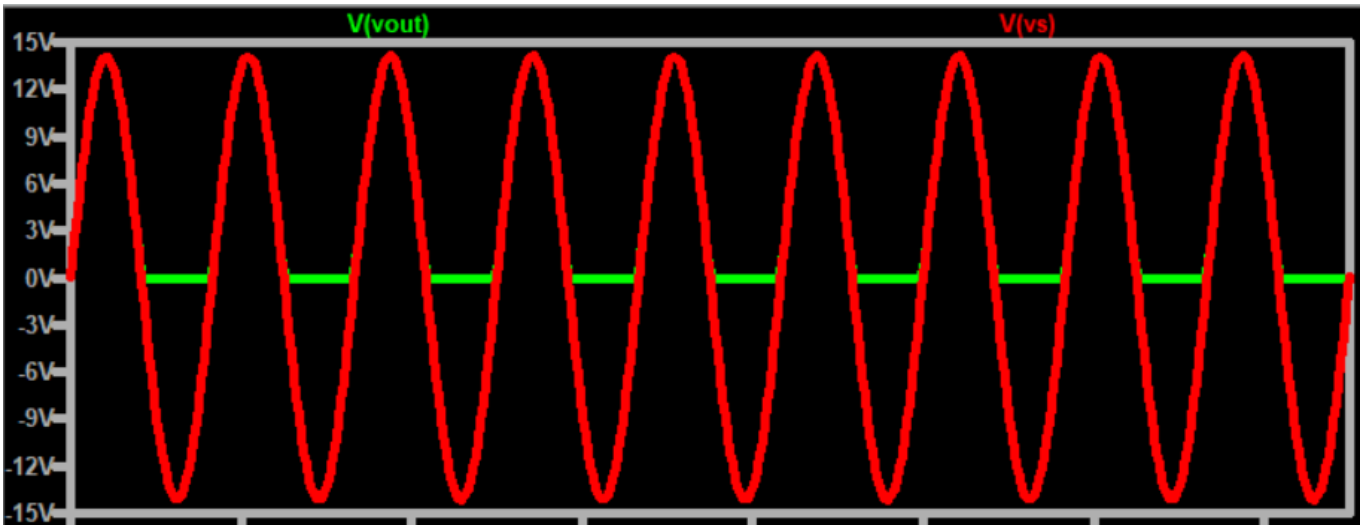

Expected half wave behavior.

Observations and Calculations:

In this section you will be analyze the output of the rectifier to understand its performance

1. From your transient plot, complete the entries in the table for the
   a. output voltage
   b. load current
   c. source voltage
   d. source current

```
vavg: AVG(v(vout))=4.5085 FROM 0 TO 0.15
vsrms: RMS(v(vs))=9.977 FROM 0 TO 0.15
isrms: RMS(i(l2))=0.14111 FROM 0 TO 0.15
vorms: RMS(v(vout))=7.0555 FROM 0 TO 0.15
iorms: RMS(i(r1))=0.14111 FROM 0 TO 0.15
s: vsrms*isrms=1.40785
p: AVG(v(vout)*i(r1))=0.995602 FROM 0 TO 0.15
pf: p/s=0.707177
```

Input Output voltage table

	Average	RMS	Peak
Output Voltage	**4.5085V**	**7.0555 V**	**2*7.0555=14.111V**
Load Current	**4.5085/50=.09017A**	**.14111 A**	**.14111*2=.28222Aa**
Source Voltage	**0V**	**9.977 V**	**14.111 V**

Source Current	**.09017A**	**.14111 A**	**.28222 A**

2. From the results recorded in your table or from your measure statements compute the power factor.

   pf: p/s=0.707177

3. Run a FFT/Fourier analysis on the output to observe the frequency components of the output. Record your results in the table.
   To view an FFT of the transient simulation, right click on the waveform viewer and select *View>FFT*. In the window that pops up, select the waveforms of interest and ***select 4096 for Number of data point samples in time***. Make sure to include this plot in your final report. Enter the *.op* commands (Spice directive) **.OPTIONS plotwinsize=0** and **.OPTIONS numdgt=7** to give your simulation more resolution.

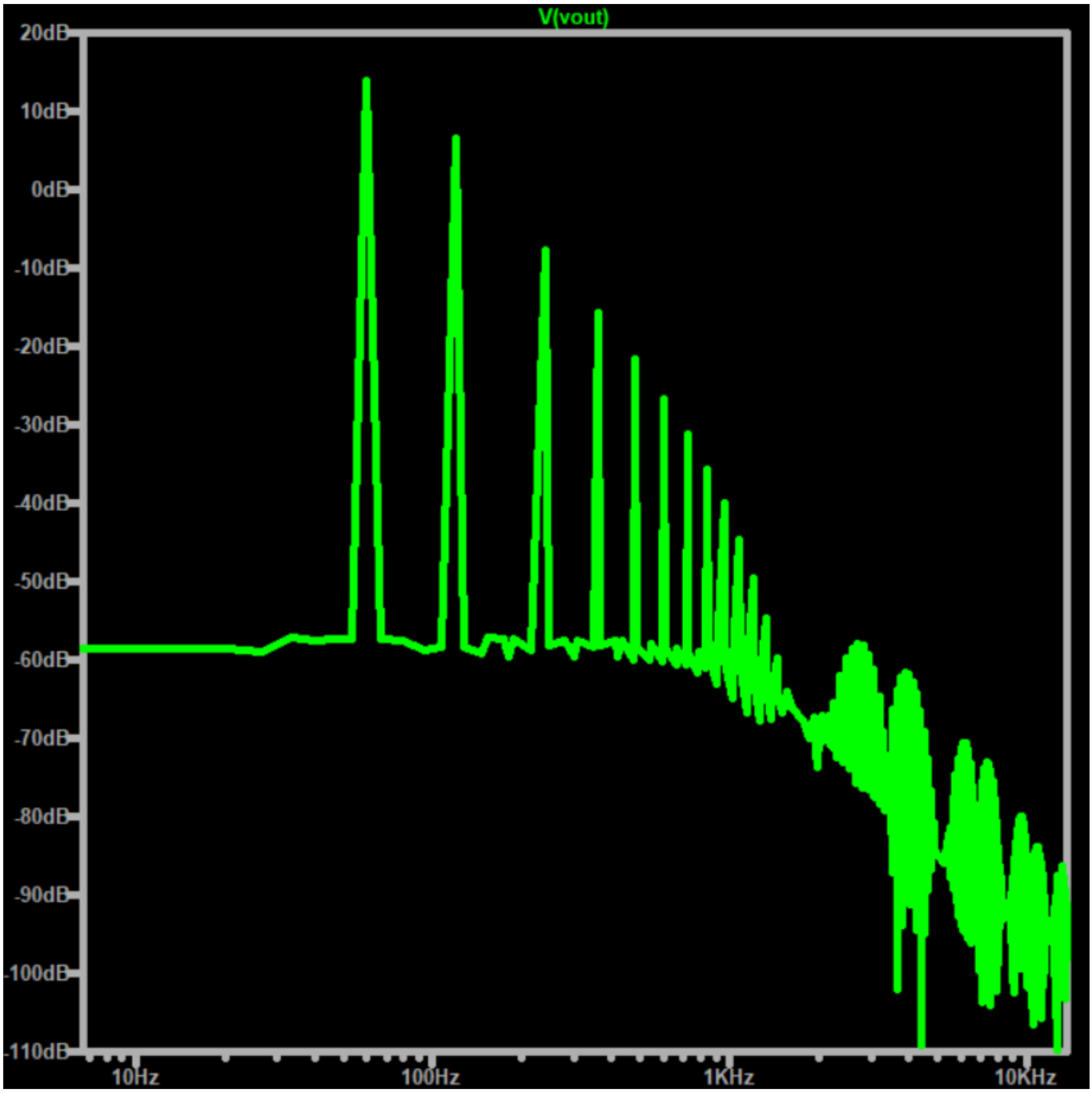

Note: To get a log file showing the harmonic distortions via a Fourier transform, enter the *.op* commands **.FOUR 60hz 12 I(Rload)** and **.FOUR 60hz 12 V(Vo)**. For these commands, the arguments represent the fundamental frequency, the number of harmonics to be measured, and the voltage to be used, respectively. After the simulation is run, the harmonic distortion log file can be found in the same directory as the circuit file and it can be viewed as a .log. Use WordPad to view it.

```
.OP point found by inspection.
N-Period=1
Fourier components of I(r1)
DC component:0.0900944

Harmonic          Frequency          Fourier          Normalized
 Number             [Hz]            Component          Component
    1              6.000e+1          1.411e-1          1.000e+0
    2              1.200e+2          5.933e-2          4.205e-1
    3              1.800e+2          1.375e-4          9.742e-4
    4              2.400e+2          1.144e-2          8.105e-2
    5              3.000e+2          1.422e-4          1.008e-3
    6              3.600e+2          4.611e-3          3.268e-2
    7              4.200e+2          1.479e-4          1.048e-3
    8              4.800e+2          2.354e-3          1.668e-2
    9              5.400e+2          1.534e-4          1.087e-3
   10              6.000e+2          1.347e-3          9.545e-3
   11              6.600e+2          1.577e-4          1.118e-3
   12              7.200e+2          8.234e-4          5.835e-3
Partial Harmonic Distortion: 42.994613%
Total Harmonic Distortion:   43.001845%
```

I load = I source

```
N-Period=1
Fourier components of V(vout)
DC component:4.50472

Harmonic          Frequency          Fourier          Normalized
 Number             [Hz]            Component          Component
    1              6.000e+1          7.055e+0          1.000e+0
    2              1.200e+2          2.966e+0          4.205e-1
    3              1.800e+2          6.873e-3          9.742e-4
    4              2.400e+2          5.718e-1          8.105e-2
    5              3.000e+2          7.110e-3          1.008e-3
    6              3.600e+2          2.305e-1          3.268e-2
    7              4.200e+2          7.394e-3          1.048e-3
    8              4.800e+2          1.177e-1          1.668e-2
    9              5.400e+2          7.669e-3          1.087e-3
   10              6.000e+2          6.734e-2          9.545e-3
   11              6.600e+2          7.884e-3          1.118e-3
   12              7.200e+2          4.117e-2          5.835e-3
Partial Harmonic Distortion: 42.994613%
Total Harmonic Distortion:   43.001845%
```

```
N-Period=1
Fourier components of V(vs)
DC component:-0.000526783
```

Harmonic Number	Frequency [Hz]	Fourier Component	Normalized Component
1	6.000e+1	1.411e+1	1.000e+0
2	1.200e+2	4.886e-4	3.463e-5
3	1.800e+2	4.983e-4	3.532e-5
4	2.400e+2	5.084e-4	3.603e-5
5	3.000e+2	4.803e-4	3.404e-5
6	3.600e+2	4.434e-4	3.142e-5
7	4.200e+2	4.409e-4	3.125e-5
8	4.800e+2	4.435e-4	3.143e-5
9	5.400e+2	4.100e-4	2.906e-5
10	6.000e+2	3.650e-4	2.587e-5
11	6.600e+2	3.543e-4	2.511e-5
12	7.200e+2	3.531e-4	2.503e-5

```
Partial Harmonic Distortion: 0.010308%
Total Harmonic Distortion:   0.046113%
```

5. **Observations to be noted for the report:**

- ❖ What do you notice with the waveforms? Describe what is happening when the AC signal is positive and when the signal is negative.
  The signal is put through when positive, but not when negative (b\c of diode)
- ❖ What are important parameters to consider when picking a diode?

Vf and max current. Also max backwards Voltage/current.

- ❖ What is ideal power factor possible for this rectifier. What power factor was obtained. Are these the same. Explain why or why not?

It is sqrt(2)/2, and I obtained .7077 which is really close. These are essentially the same.

Section 2: Resistive load with non-ideal diode

For this section copy your schematic from Section 1. Right click on the diode and select the "Pick New Diode" button and select model **1N4148.**
Repeat the simulations and Observations from Section 1.

Further observations to be noted for the report:

- ❖ Why is the output signal peak lower than the input signal peak?

We now no longer have an ideal diode. There is a drop.

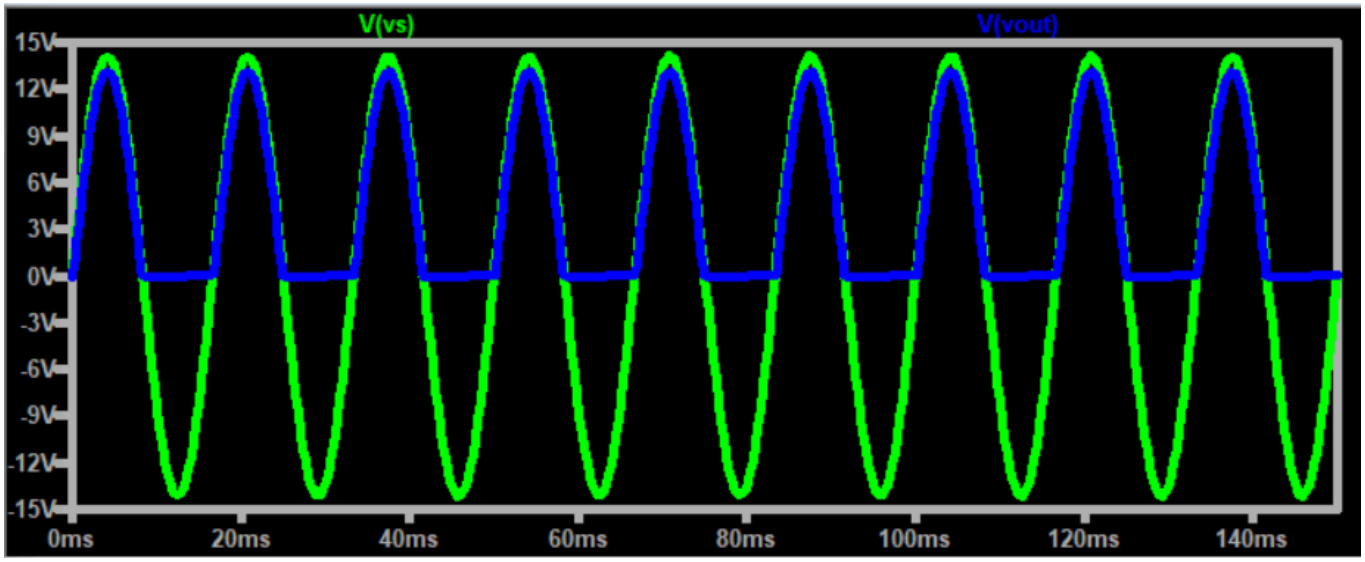


```
vavg: AVG(v(vout))=4.0516 FROM 0 TO 0.15
vsrms: RMS(v(vs))=9.97694 FROM 0 TO 0.15
isrms: RMS(i(l2))=0.129244 FROM 0 TO 0.15
vorms: RMS(v(vout))=6.46221 FROM 0 TO 0.15
iorms: RMS(i(r1))=0.129244 FROM 0 TO 0.15
s: vsrms*isrms=1.28946
p: AVG(v(vout)*i(r1))=0.835203 FROM 0 TO 0.15
pf: p/s=0.647715
vsavg: AVG(v(vs))=-0.00011659 FROM 0 TO 0.15
isavg: AVG(i(l2))=0.0810321 FROM 0 TO 0.15
```

- ❖ Why is there a very small non-conduction time to the output when the input voltage is positive but small?
  The input is now less than the diode Vf.
- ❖ Is the average output voltage as expected? Explain why or why not.

No in that it's less than what it ideally would be, but also yes because we know WHY the drop happens.

- ❖ Is the power factor as expected? Explain why or why not.

Because we lose power to the diodes now, it is lower than the expected sqrt(2)/2, but ultimately this is expected.

Section 3: RC load

1. Modify the previous circuit from Section 1 to add a capacitor load in parallel with the resistor as shown in Figure 3. The diodes will be ideal. Set the value of C1 to be 250uF.

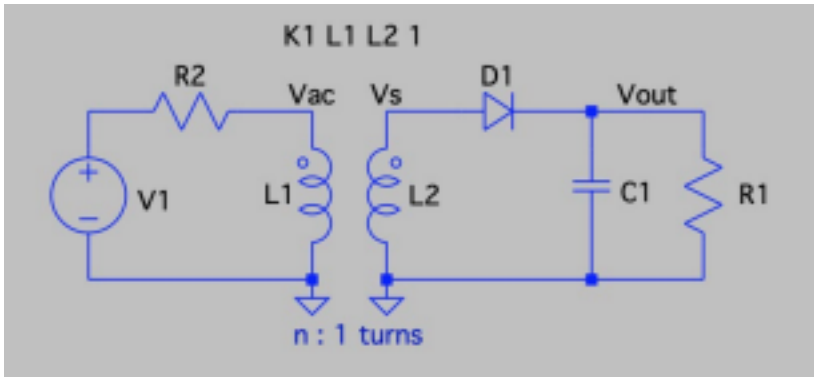

Figure 3. Half-Wave Rectifier with a RC Load

2. Using the same options as before, run a transient analysis. Zoom in on two to three cycles of the output ***after*** it has reached steady-state.

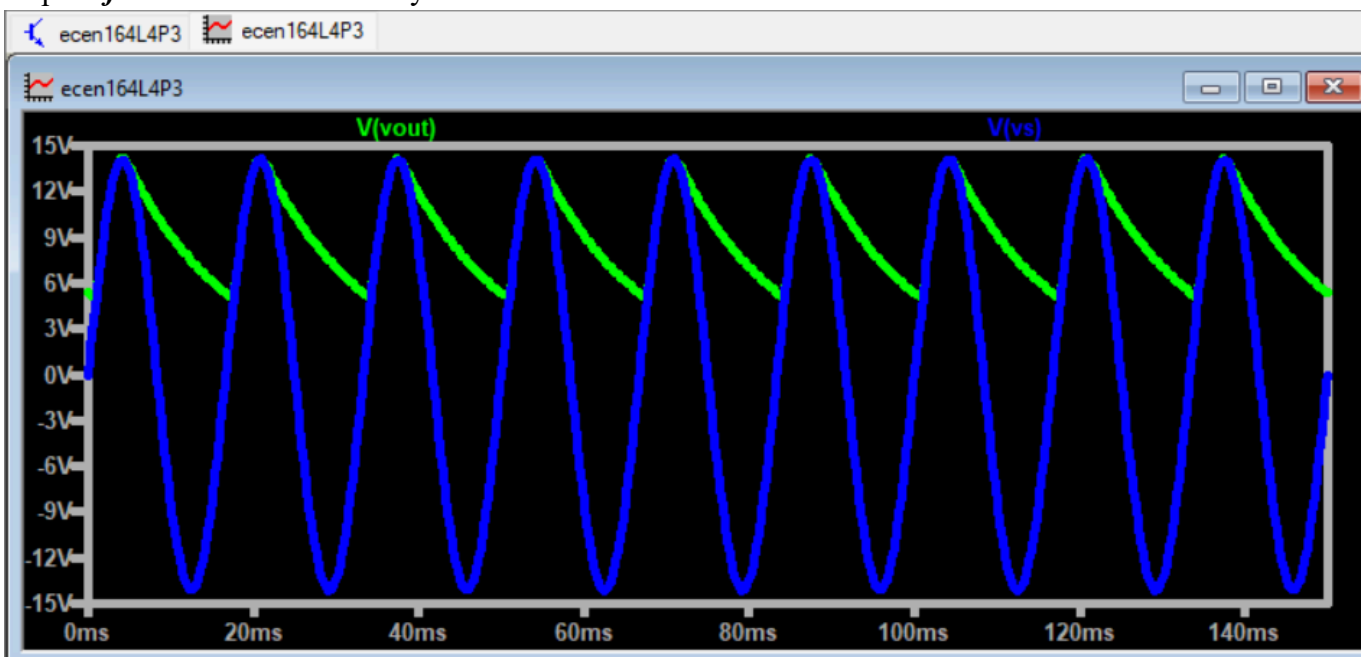


```
vavg: AVG(v(vout))=9.30771 FROM 0 TO 0.15
vsrms: RMS(v(vs))=9.97739 FROM 0 TO 0.15
isrms: RMS(i(l2))=0.423783 FROM 0 TO 0.15
vorms: RMS(v(vout))=9.73158 FROM 0 TO 0.15
iorms: RMS(i(r1))=0.194632 FROM 0 TO 0.15
s: vsrms*isrms=4.22824
p: AVG(v(vout)*i(r1))=1.89407 FROM 0 TO 0.15
pf: p/s=0.447957
vsavg: AVG(v(vs))=0.000224136 FROM 0 TO 0.15
isavg: AVG(i(l2))=0.187766 FROM 0 TO 0.15


Date: Wed Jan 28 15:55:40 2026
Total elapsed time: 0.106 seconds.
```

3. Rerun simulations for C1 to be 2.5mF.

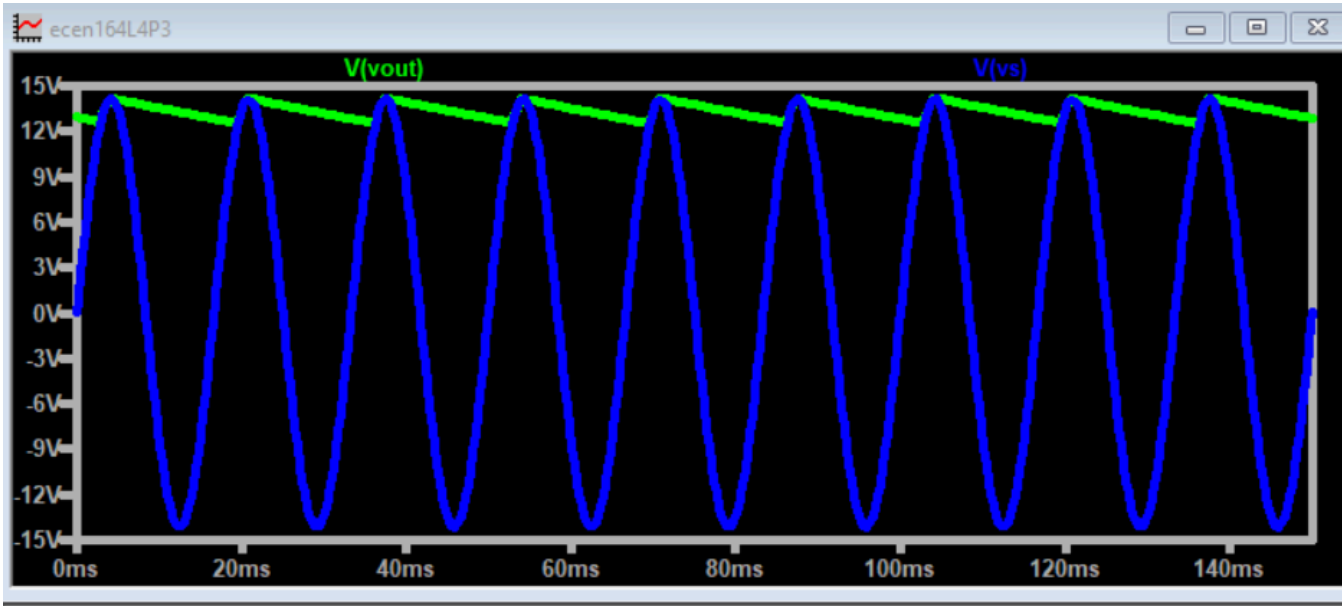


```
vavg: AVG(v(vout))=13.3837 FROM 0 TO 0.15
vsrms: RMS(v(vs))=9.97696 FROM 0 TO 0.15
isrms: RMS(i(l2))=0.937018 FROM 0 TO 0.15
vorms: RMS(v(vout))=13.392 FROM 0 TO 0.15
iorms: RMS(i(r1))=0.26784 FROM 0 TO 0.15
s: vsrms*isrms=9.34859
p: AVG(v(vout)*i(r1))=3.58692 FROM 0 TO 0.15
pf: p/s=0.383686
vsavg: AVG(v(vs))=-0.000454362 FROM 0 TO 0.15
isavg: AVG(i(l2))=0.266515 FROM 0 TO 0.15


Date: Wed Jan 28 15:57:03 2026
Total elapsed time: 0.114 seconds.
```

From your transient plot, find the following values and fill the table:

	Average	RMS	Peak	Voltage Ripple
Output Voltage (C=250uF)	9.3077V	9.9773V	14.111V	14.111(1-e^(-T/RC)= 10.391V
Output Voltage (C=2.5mF)	13.3837V	13.392V	14.111V	14.111/(50*2.5m*60) =1.881V

What do you notice with the waveform?

The capacitor holds some voltage during the negative input time.

Describe how the addition of the capacitor effects the output signal.

What happens to the output signal if the capacitor were to increase?

The ripple decreases and we get closer to a DC value.

What if the resistor were to decrease?

The ripple would increase.

What is the ripple voltage seen at the output?

It is 1.881V for the larger cap, and 10.391V for the smaller one.

Take screenshot of your circuit and all waveforms necessary to support your claims above.

Section 4: RL load with ideal diodes

For this section copy your schematic from Section 1. Put an inductor L3 in series with the load as shown in Figure 4. The value of L3 is 15 mH.

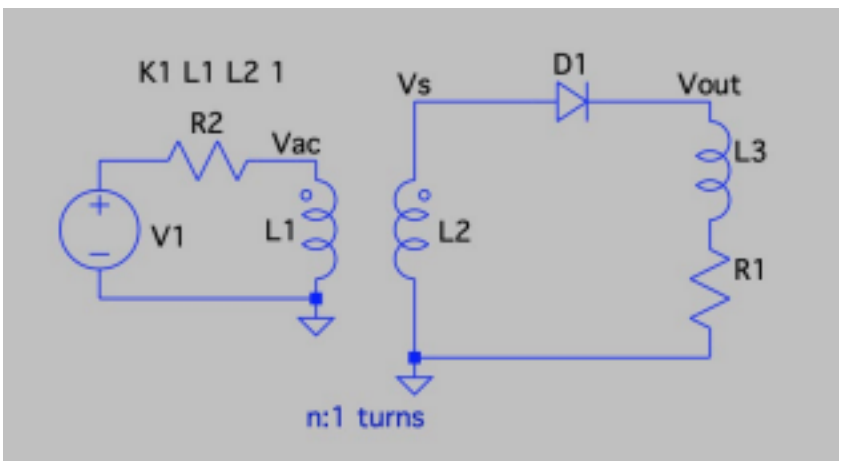

Figure 4. Half-Wave Rectifier with a RL Load

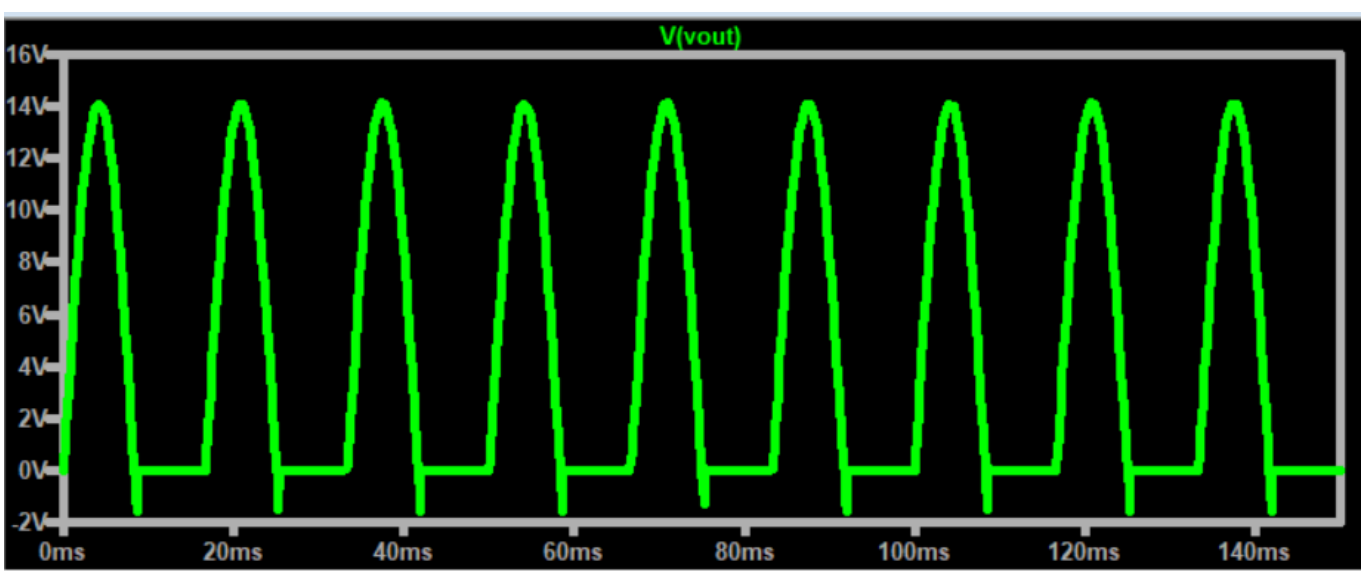

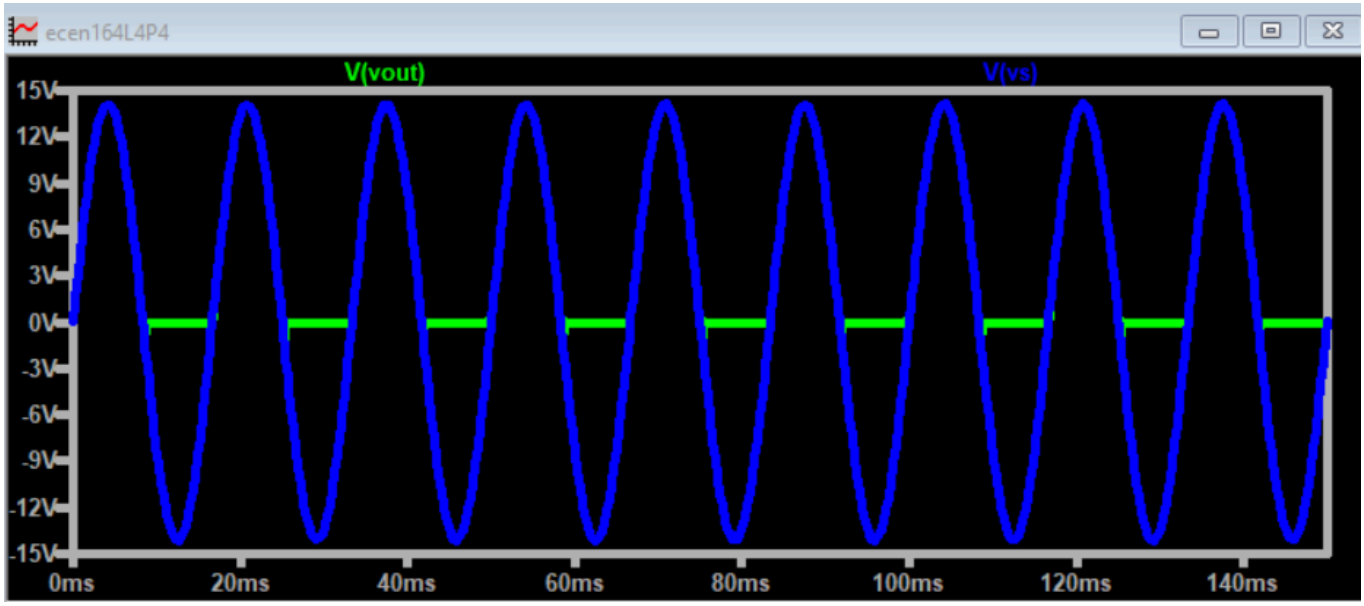

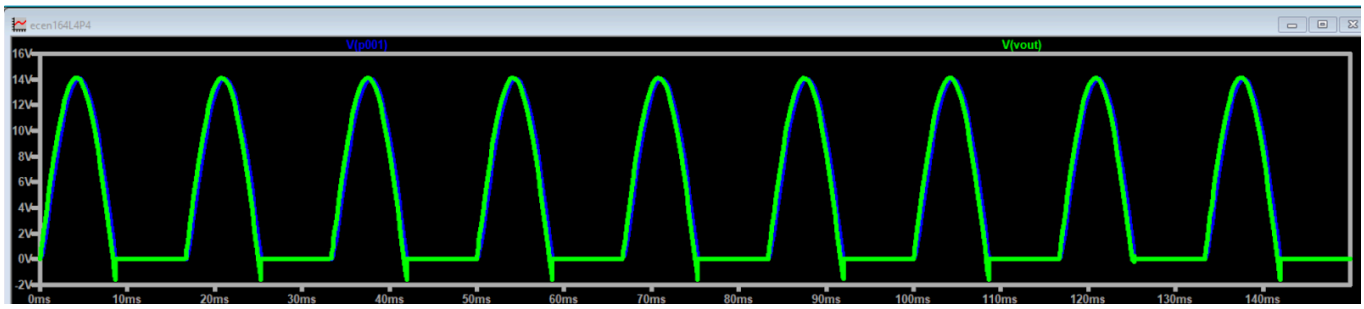

Further observations:

Take a screenshot of the voltage across the inductor

Take a screenshot of the voltage across the resistor

What do you notice with the waveforms? Describe how the addition of the inductor effects the output signal.

The inductor adds a slight phase shift.

What would happen to the output signal if the inductor were to increase? What if the resistor were to increase?

We would get a greater phase shift if the inductor increased and the voltage would begin to decrease a bit. The resistor helps lessen the shift.

What do you notice about the average output voltage when compared to just a resistive load? What do you notice about the power factor when compared to just a resistive load?

```
vavg: AVG(v(vout))=4.47865 FROM 0 TO 0.15
vsrms: RMS(v(vs))=9.97849 FROM 0 TO 0.15
isrms: RMS(i(l2))=0.14025 FROM 0 TO 0.15
vorms: RMS(v(vout))=7.05545 FROM 0 TO 0.15
iorms: RMS(i(r1))=0.14025 FROM 0 TO 0.15
s: vsrms*isrms=1.39949
p: AVG(v(vout)*i(r1))=0.983532 FROM 0 TO 0.15
pf: p/s=0.70278
vsavg: AVG(v(vs))=-0.00158306 FROM 0 TO 0.15
isavg: AVG(i(l2))=0.0895614 FROM 0 TO 0.15


Date: Wed Jan 28 16:29:27 2026
Total elapsed time: 0.119 seconds.
```

The avg is slightly lower, and PF is slightly lower. A lot closer than with the capacitor though.

Part 2: Single-Phase Rectifier

Draw the schematic for the single-phase rectifier in Figure 5 using ideal diodes and resistive load RL = 50 ohms. Label the source voltage Vsp and Vsn so as to measure across the secondary.

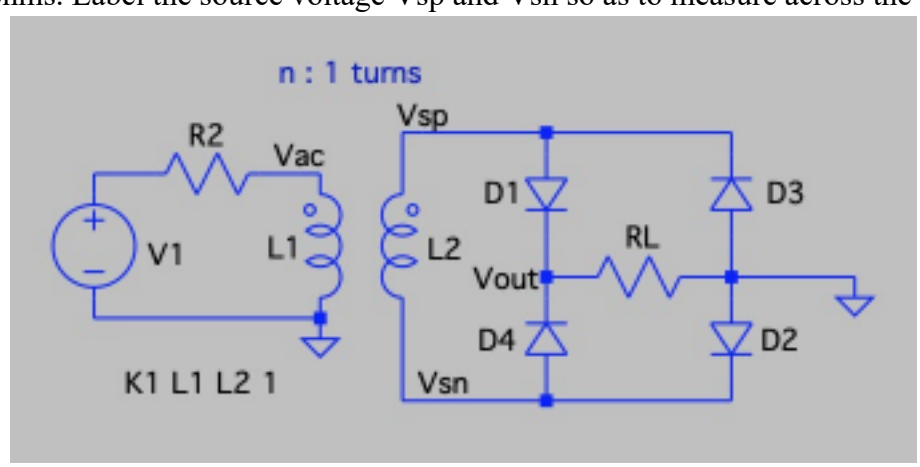

Figure 5. Single phase rectifier

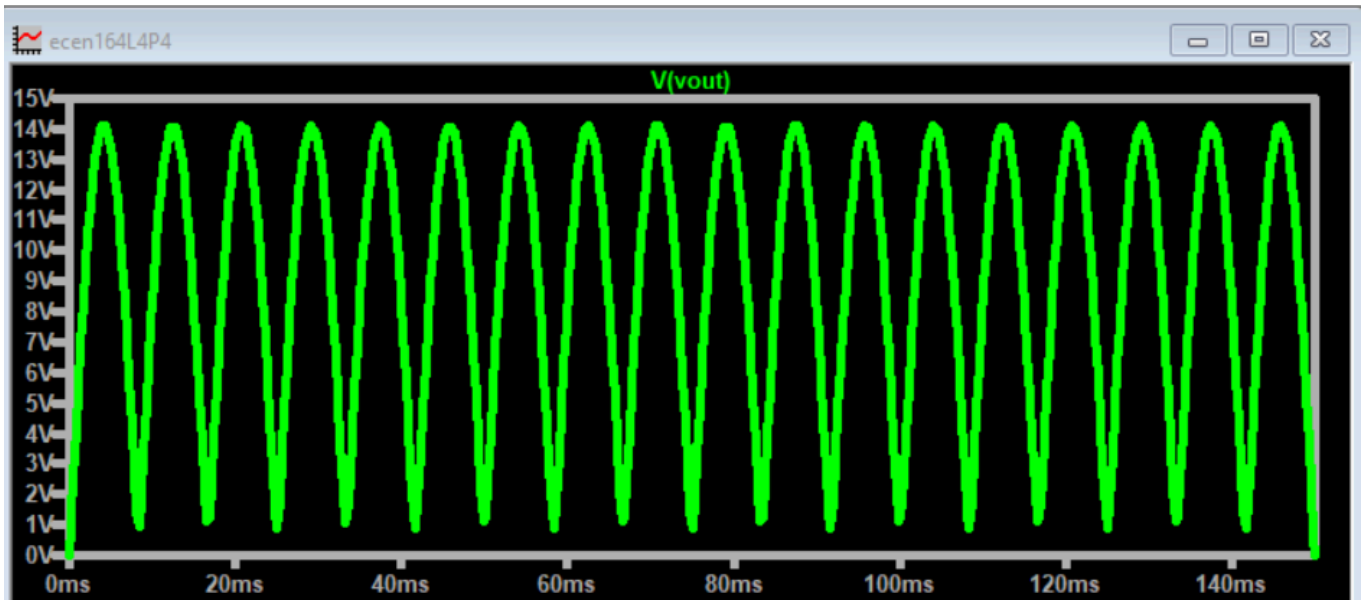


```
vavg: AVG(v(vout))=9.01729 FROM 0 TO 0.15
vsrms: RMS(v(vac)/12)=9.97699 FROM 0 TO 0.15
isrms: RMS(i(r1))=0.199598 FROM 0 TO 0.15
vorms: RMS(v(vout))=9.97989 FROM 0 TO 0.15
iorms: RMS(i(r1))=0.199598 FROM 0 TO 0.15
s: vsrms*isrms=1.99139
p: AVG(v(vout)*i(r1))=-1.99197 FROM 0 TO 0.15
pf: p/s=-1.00029
vsavg: AVG(v(vs))=4.50841 FROM 0 TO 0.15
isavg: AVG(i(l2))=-9.52121e-06 FROM 0 TO 0.15


Date: Wed Jan 28 16:51:39 2026
Total elapsed time: 0.099 seconds.
```

```
N-Period=1
Fourier components of V(vout)
DC component:9.00979

Harmonic          Frequency          Fourier          Normalized
 Number             [Hz]            Component          Component
    1              6.000e+1          1.346e-2          1.000e+0
    2              1.200e+2          5.933e+0          4.409e+2
    3              1.800e+2          1.380e-2          1.025e+0
    4              2.400e+2          1.143e+0          8.494e+1
    5              3.000e+2          1.412e-2          1.049e+0
    6              3.600e+2          4.615e-1          3.429e+1
    7              4.200e+2          1.488e-2          1.106e+0
    8              4.800e+2          2.350e-1          1.746e+1
    9              5.400e+2          1.522e-2          1.131e+0
   10              6.000e+2          1.350e-1          1.003e+1
   11              6.600e+2          1.584e-2          1.177e+0
   12              7.200e+2          8.201e-2          6.094e+0
Partial Harmonic Distortion: 45077.448396%
Total Harmonic Distortion:   45085.008026%
```

Further observations to be noted for the report:

❖ How does the average output voltage compare to the half wave rectifier?

The average is double (9.01729V).

❖ How does the power factor compare to the half wave rectifier?

The power factor is 1 which is perfect (even tho it says -1.00029, it's only neg because of current direction)

❖ What do you observe about the harmonics?

Harmonics are bigger on even integers which is expected for a single phase rectifier (n=0,2,4,...)

Part 3: Three-Phase Rectifier

Draw the schematic for the three-phase rectifier using ideal diodes and resistive load as shown in Figure 6. The inputs are three sinusoids of 10V peak but 120 degrees apart in phase.

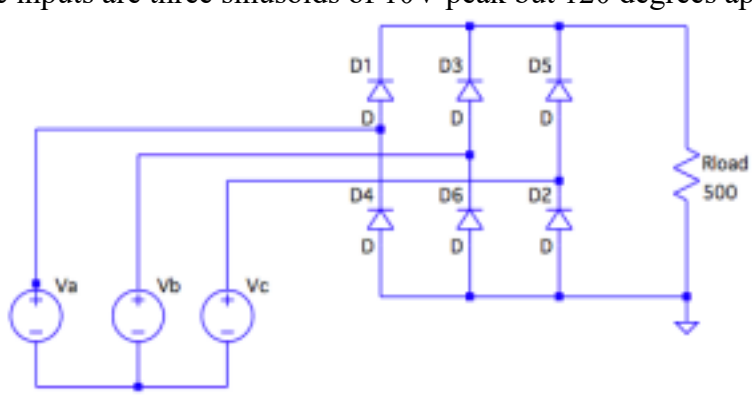

Figure 6. Three-phase rectifier

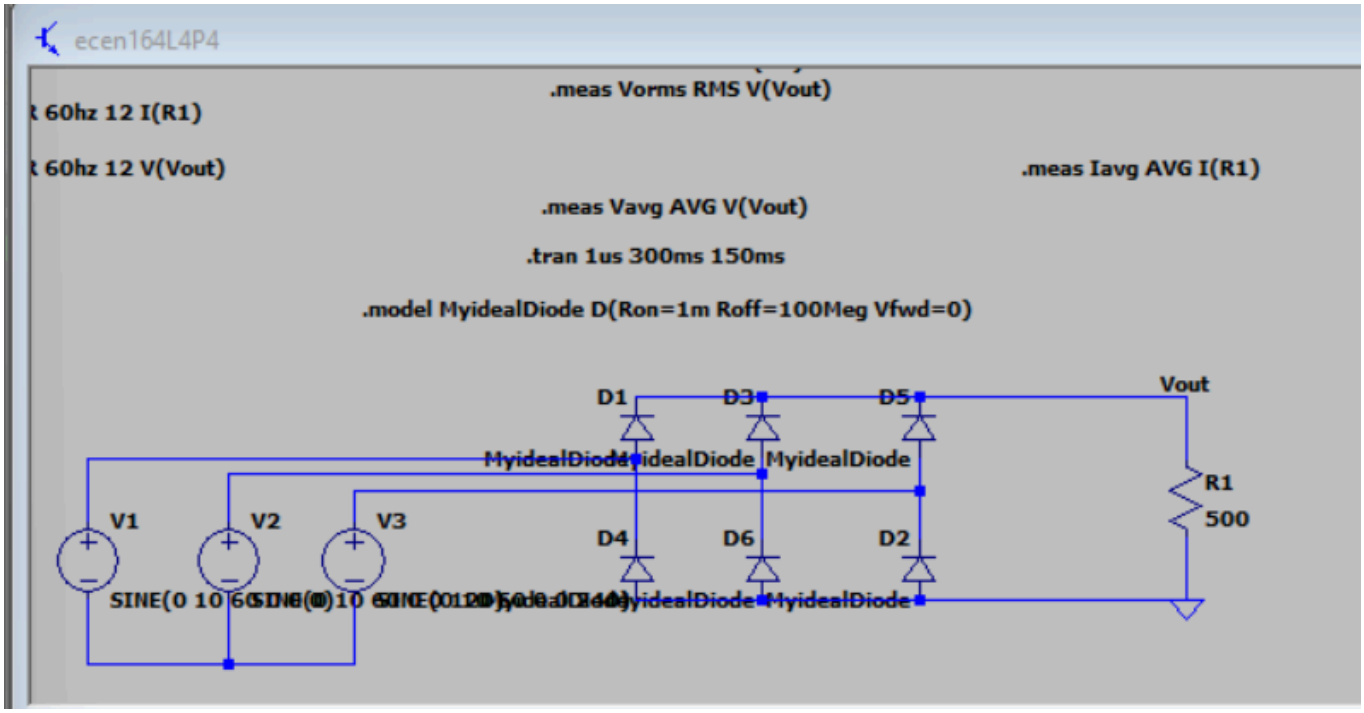
ecen164L4P4
.meas Vorms RMS V(Vout)
60hz 12 I(R1)
60hz 12 V(Vout)
.meas Iavg AVG I(R1)
.meas Vavg AVG V(Vout)
.tran 1us 300ms 150ms
.model MyidealDiode D(Ron=1m Roff=100Meg Vfwd=0)
D1
D3
D5
Vout
MyidealDiode
MyidealDiode
MyidealDiode
R1
500
V1
V2
V3
D4
D6
D2
SINE(0 10 60
MyidealDiode
MyidealDiode

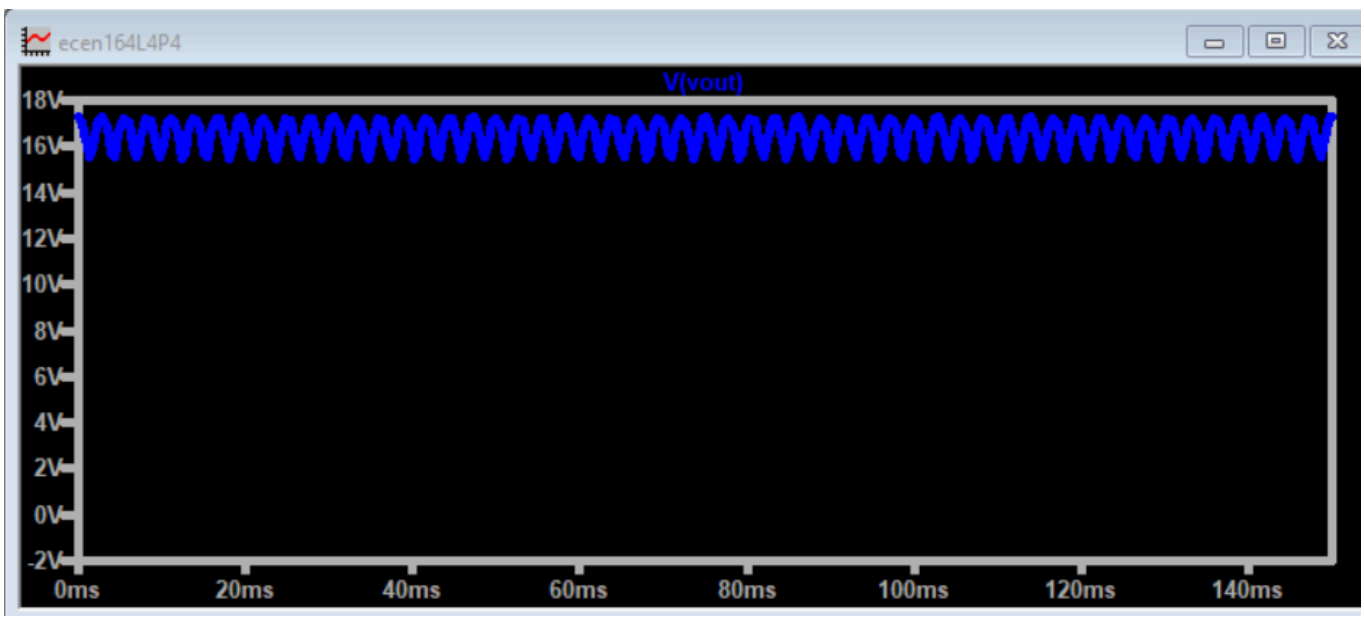
ecen164L4P4
V(vout)
18V
16V
14V
12V
10V
8V
6V
4V
2V
0V
-2V
0ms
20ms
40ms
60ms
80ms
100ms
120ms
140ms

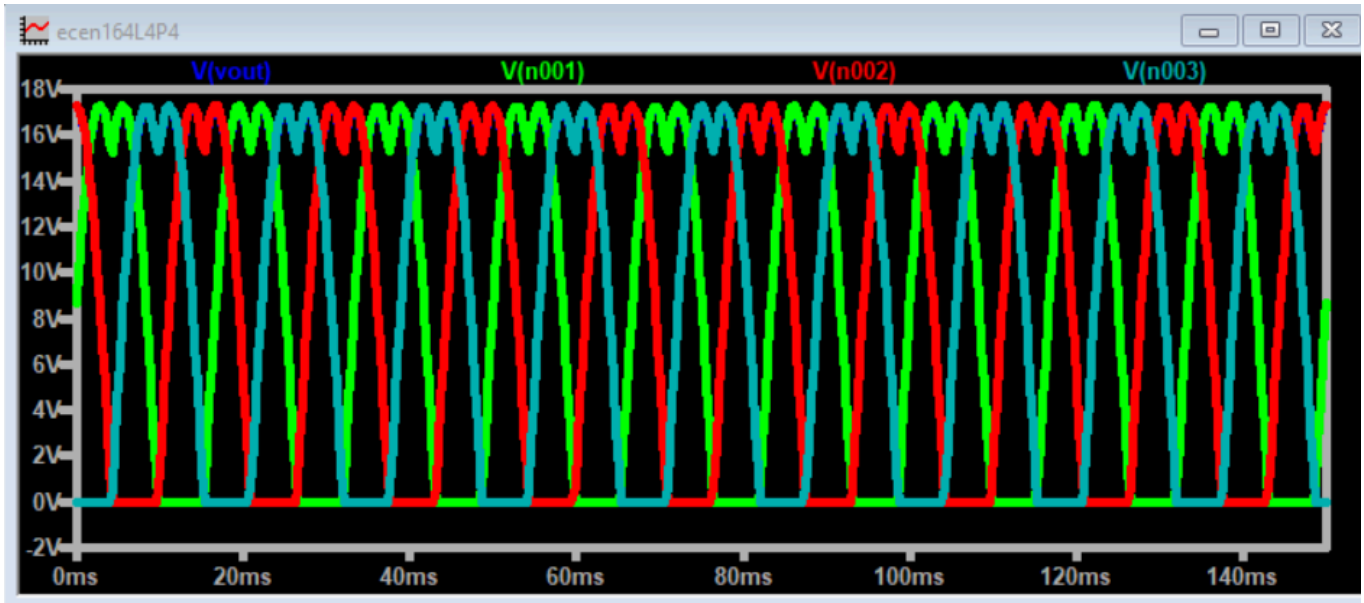

1. Run a transient simulation. From your transient plot, find
    a. Average output voltage
    b. Average load current

```
vavg: AVG(v(vout))=16.5403 FROM 0 TO 0.15
vorms: RMS(v(vout))=16.5506 FROM 0 TO 0.15
iorms: RMS(i(r1))=0.0331012 FROM 0 TO 0.15
p: AVG(v(vout)*i(r1))=0.547845 FROM 0 TO 0.15
iavg: AVG(i(r1))=0.0330807 FROM 0 TO 0.15
```

This checks out as VmL-L = sqrt(3) * Vpeak = 10 * sqrt(3) = 17.321V
Vavg = VmL-L * 3 / pi = 16.540V
Iavg = Vavg/500 = .033A

2. Run a Fourier transform on the output to observe the frequency components of the output.
    a. What is the amplitude of harmonics n=2,4, 6, 8, 10 and 12?

```
N-Period=1
Fourier components of V(vout)
DC component:16.5406
```

Harmonic Number	Frequency [Hz]	Fourier Component	Normalized Component
1	6.000e+1	1.351e-3	1.000e+0
2	1.200e+2	1.348e-3	9.980e-1
3	1.800e+2	8.937e-3	6.614e+0
4	2.400e+2	1.338e-3	9.899e-1
5	3.000e+2	1.329e-3	9.838e-1
6	3.600e+2	8.157e-1	6.037e+2
7	4.200e+2	1.308e-3	9.679e-1
8	4.800e+2	1.295e-3	9.581e-1
9	5.400e+2	8.324e-3	6.161e+0
10	6.000e+2	1.263e-3	9.349e-1
11	6.600e+2	1.245e-3	9.216e-1
12	7.200e+2	1.230e-1	9.106e+1

```
Partial Harmonic Distortion: 61060.942823%
Total Harmonic Distortion:   61101.617225%
```

b. What are the main harmonics that you observe?

Main harmonics are on DC, n =6, and n=12 which is expected for 3 phase rectifier.

Part 4: Physical build.

For all the below parts, use 1N4001 diodes provided by your TA. Measure the RMS voltage at the output of the transformer. How will this make your simulation measurements and hand calculations differ from the physical builds?

Section 1: Half wave rectifier

Build the half wave rectifier of figure 2 on your bread board.
Connect the output of the 12:1 transformer to the input of your circuit on the breadboard. Connect the input and output voltages to the oscilloscope.
Using the waveform functions of the oscilloscope find the

- **Average output voltage=4.888V**

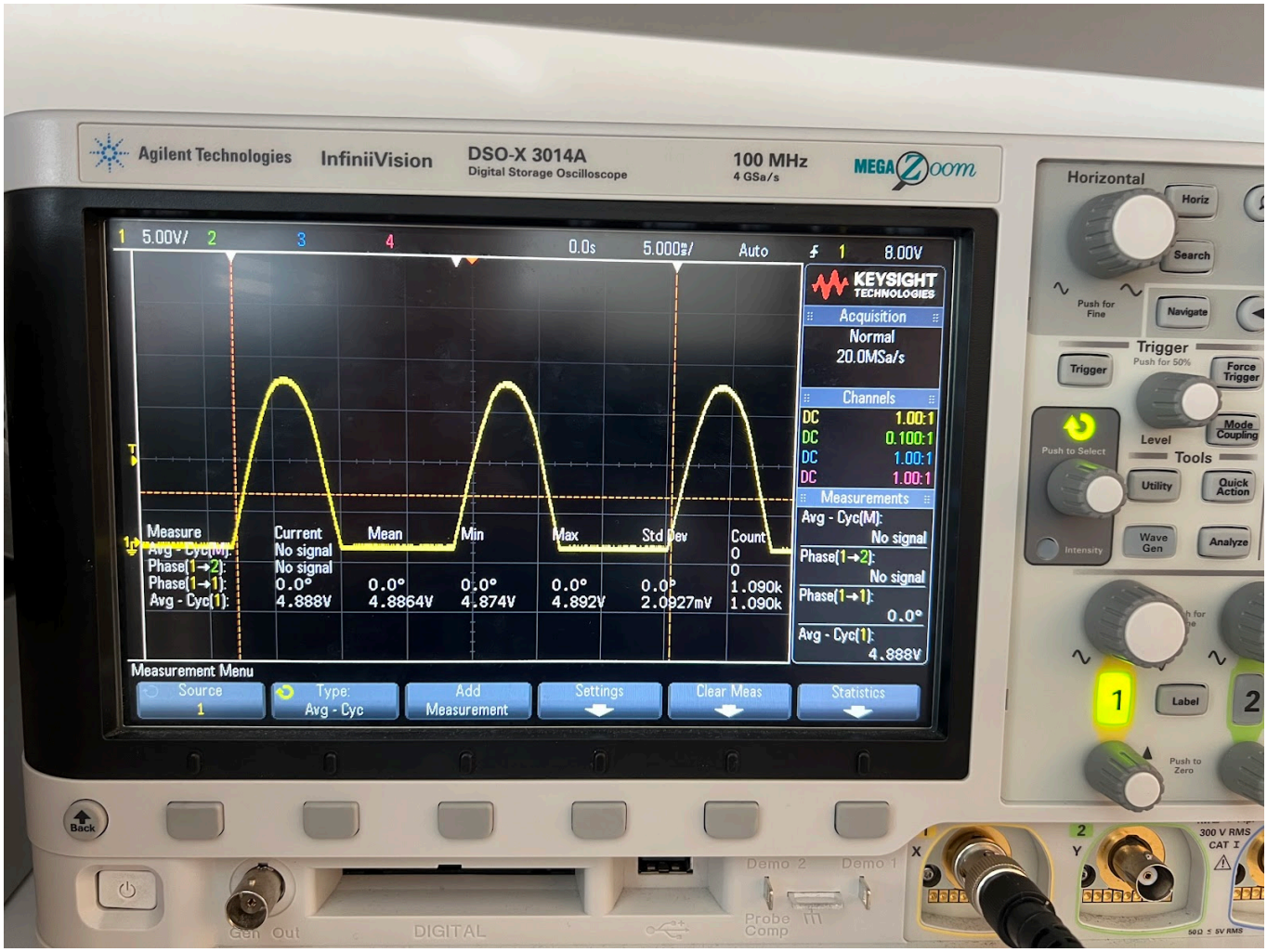

- **Average load current (calculated): 4.888/1k=4.888mA**
- **RMS load current (calculated): 4.888 * pi / (2*1k) = 7.678mA**

Run a FFT on the scope and see what components appear.

DC, n=1,n=2, and so on components appear but get progressively weaker.

Single Phase Rectifier with Resistive Load

Build the single phase rectifier of figure 5 on your breadboard using the IN4001 diode Connect the output of the 12:1 transformer to the input of your circuit on the breadboard. Connect the input and output voltages to the oscilloscope.

Using the waveform functions of the oscilloscope find the

- **Average output voltage=9.461V**

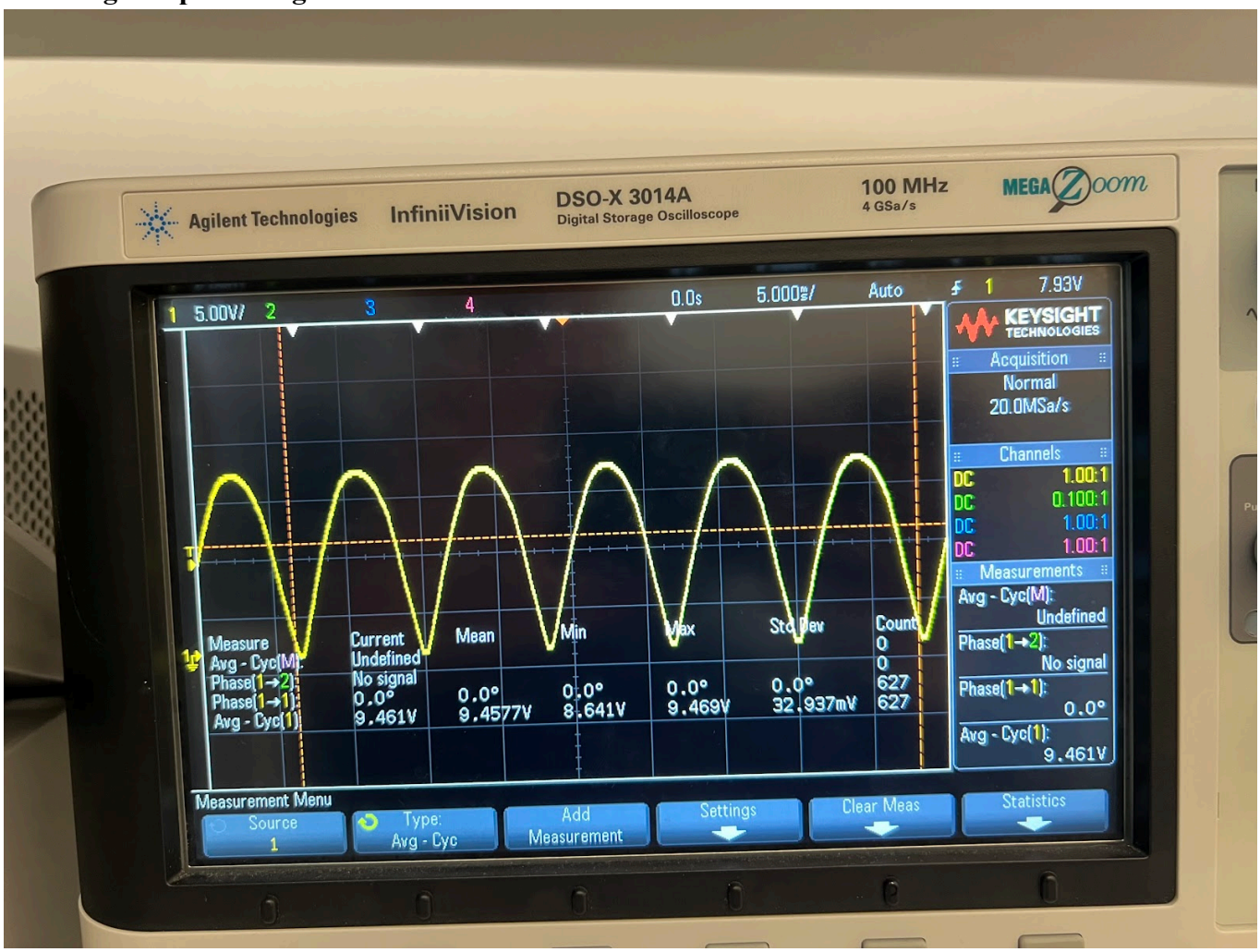

- **Average load current: 9.461/1k = 9.461mA**
- **RMS load current: 9.461 * pi / (2sqrt(2)) = 10.509mA**

Run a FFT on the scope and see what components appear.

Observations:

What do you notice about the waveforms and FFT? How is this different from what we observed from the simulations?

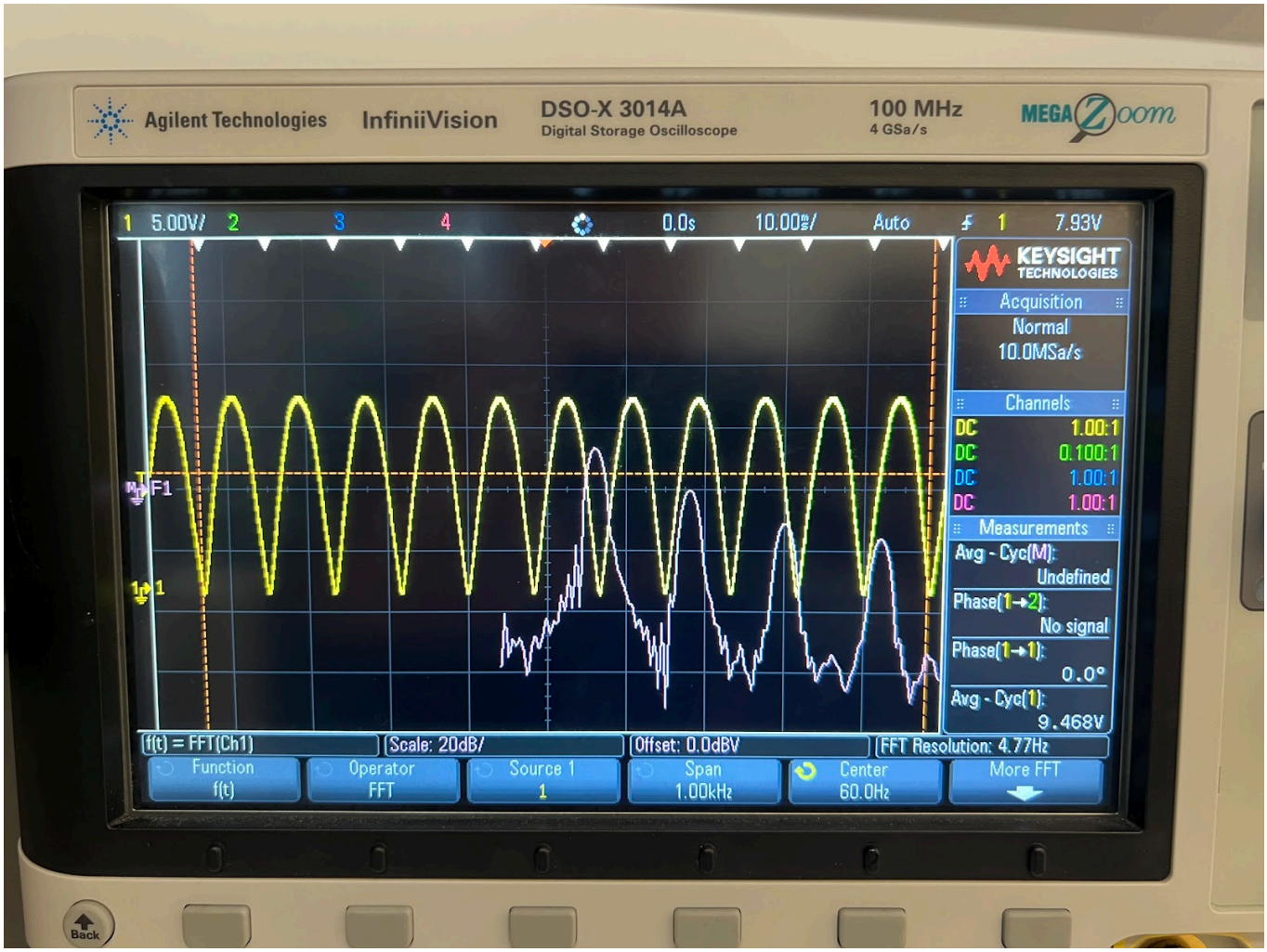

The FFT is clearer to see here and doesn't decay as fast. It's more accurate.

Single Phase Rectifier (pre-packaged diodes) with Resistive Load

Build the single phase rectifier using the 2KBP01M diode bridge.The figure below shows the pinout. Connect the signal source from the transformer to the two inner pins and the load to the two outer pins.

Review the data sheet to connect the output of the 12:1 transformer to the two inner pins and the load to the two outer pins.

Image shown is a representation only. Exact specifications should be obtained from the product data sheet.

Review the data sheet to study the characteristics of the bridge.
Connect the input and output voltages to the oscilloscope.
Using the waveform functions of the oscilloscope find the

- **Average output voltage = 9.468V**

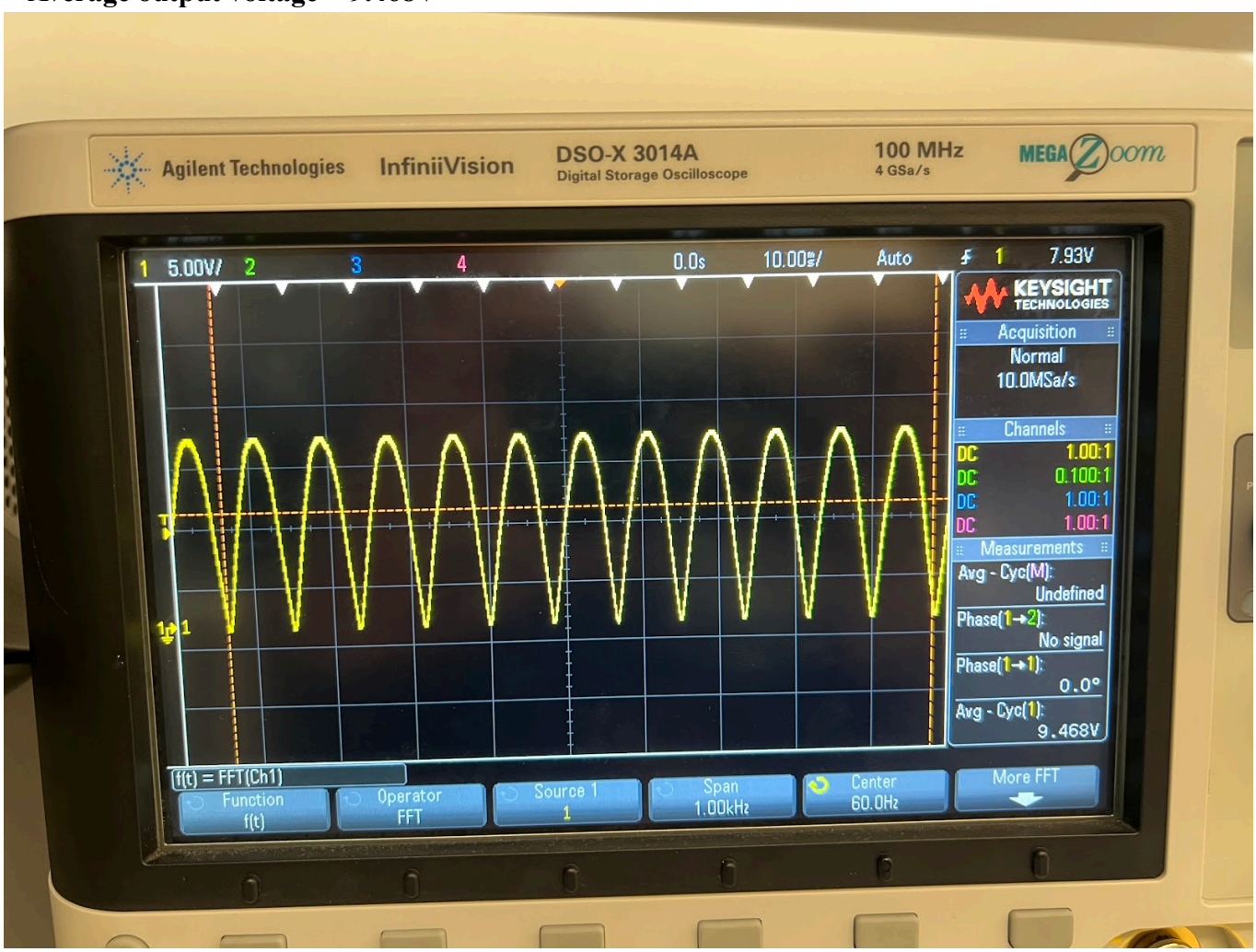

- **Average load current = ~9.461mA**
- **RMS load current = ~10.509mA**

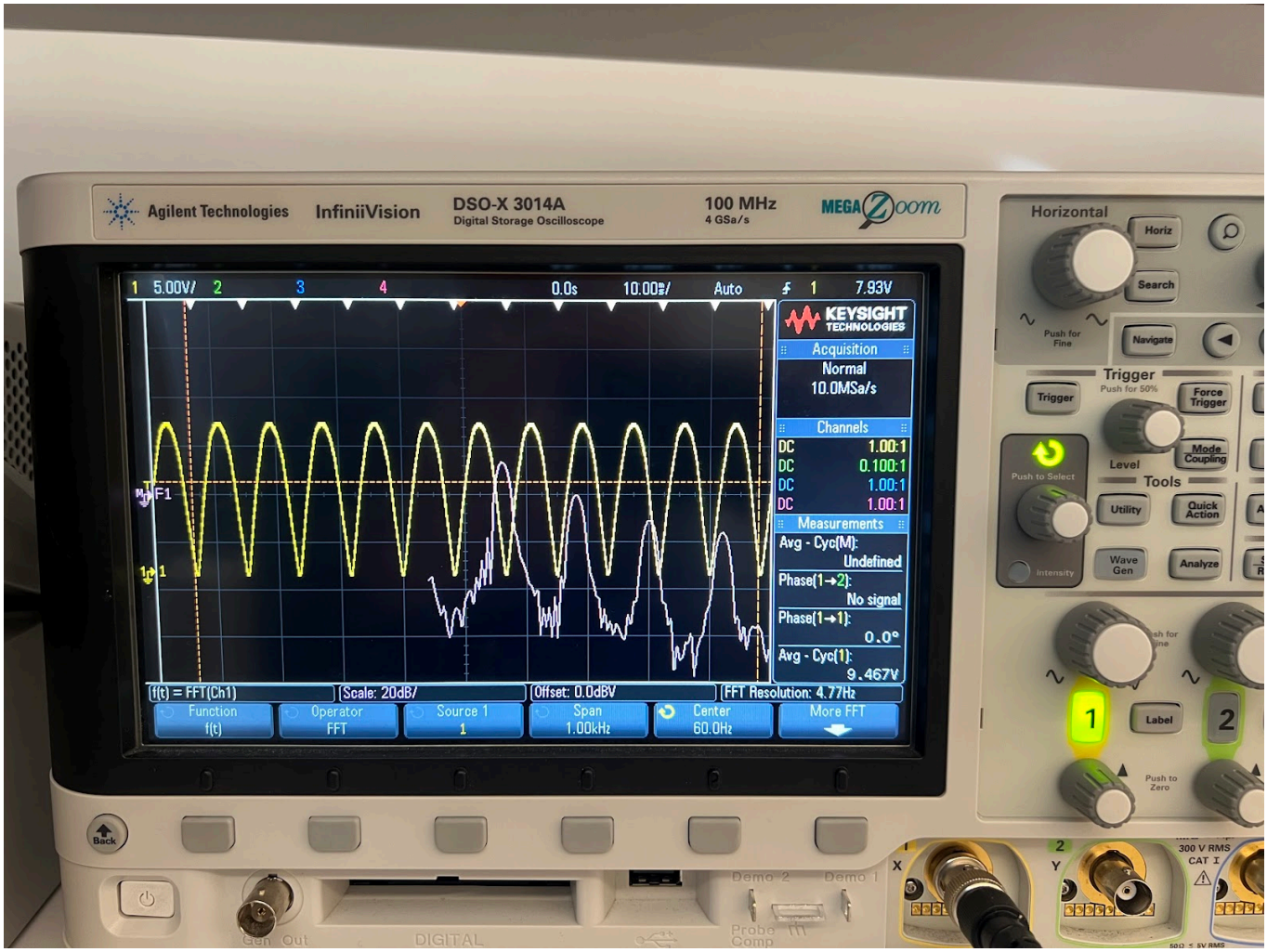

What do you notice about the waveforms and FFT? How is this different from what we observed from the simulations?

The FFT is clearer to see here and doesn't decay as fast. It's more accurate. It's very similar to the previous single phase rectifier.

III. Final Report Questions

Which rectifier has the least stringent requirements for an output filter. Explain your answer.

The three phase rectifier has the least stringent requirements because it is already the closest to a DC output.